Toolwell™
Tel: (800) 786-6112
Fax: (866) 332-3299
www.Toolwell.com
Email: info@toolwell.com

Dimensions: BÖRKEY ROLLER

Model Series KT Size # 1-3

All dimensions in **MM**

a

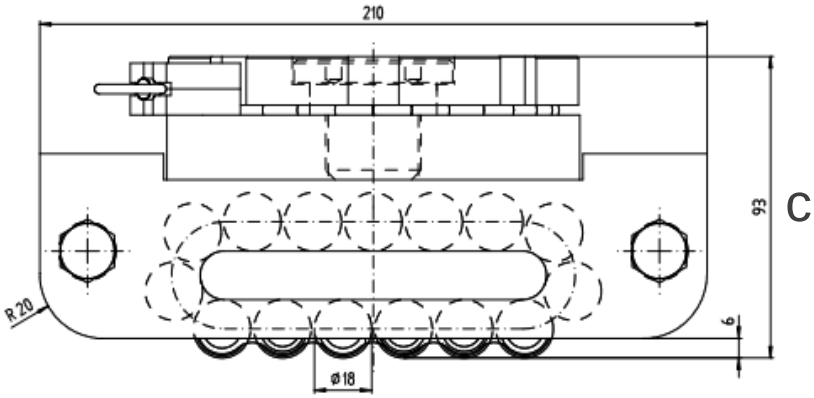

d

b

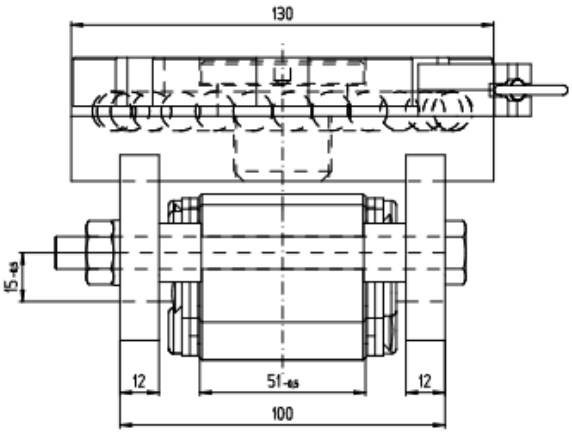

e

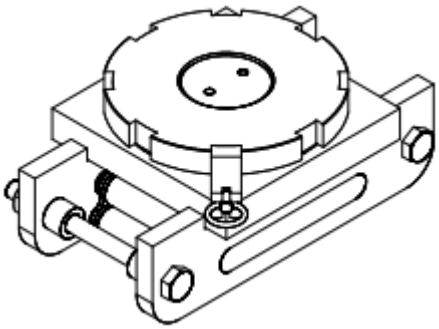

Model	a	b	c	Ø d	e
KT #1	210	130	93	18	100
KT #2	220	130	105	24	113
KT #3	270	150	127	30	130

All dimensions in MM